STEERING, STEERING ASM - Z26NEY99A4/B4/A6/B6 (C760074)

2026 RZR - RZR XP S 1000 ULTIMATE (R01) - Z26NEY99A4/B4/A6/B6

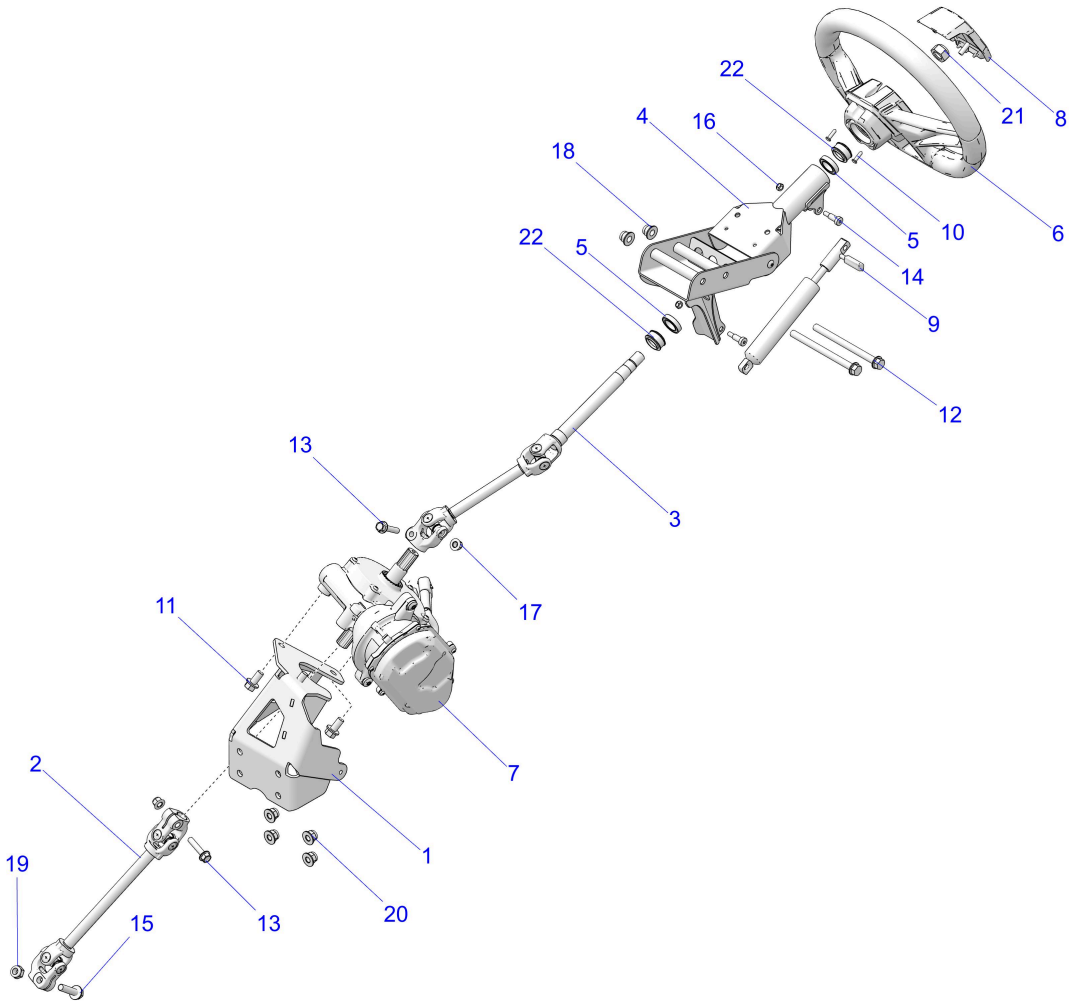

© 2025 Polaris Industries Inc. C760075

Reference #	*Part#*	*Description*	*Quantity*
1	1028908-329	WELD-EPS MOUNT,ECOAT	1
2	1824978	SHAFT-STEERING LWR	1
3	1825073	SHAFT-STEERING,UPPER	1
4	1830042-458	ASM-TILT,STEERING,RVTD,M10,BLK [INCLUDES 5]	1
5	3514686	BEARING-STEERING	2
6	1830059	WHEEL, STEERING	1
7	2418503	EPS-PGM,NXTR,RZR,72,999	1
8	5458594	CAP-STEERING WHEEL	1
9	7044098	ASM-SHOCK,OIL LOCKING,MACH	1
10	7518227	SCR-#8X3/4-HI/LO-PN-T20TRX-ZTB	2
11	7518558	BOLT-M10X1.25X20,HXFLG-OLV D	3
12	7518665	BOLT-M10X1.25X130,HXFLG-OLIVED	2
13	7518954	SCR-M8X1.25X40 10.9 HX/FL ZOD	2
14	7519980	SCR-SH-M6X1.0X11 12.9 ZB SHB	2
15	7520994	SCR-HXFL-M10X1.5X40 10.9 ZPC	1
16	7546703	NUT-6MM X 1 NYLOK-Z	2
17	7547332	NUT- M8X1.25, FLG, NYLOC-OLIVE D	2
18	7547333	NUT-HXFL M10X1.25 8 ZTB NYL	2

19	7547385	NUT-NY INS,M10X1.5,HEX,ZINC,YW	1
20	7547423	NUT-M10X1.5 HFN NYLOC ZOD	4
21	7547506	NUT-HEX-M16X2, 8 ZC NYL	1
22	7556675	BUSHING-STEERING	2

Copyright 1996-2026 Polaris Industries U.S.A All rights reserved.